TOLERANCE UNLESS OTHERWISE SPECIFIED	CAD		X04026500	REV B
.X =± .XX =± .XXX =± FINISH ✓ ANGLES =± ° HOLE DIA =± REF. ANSI Y14.5M–1982	SCALE PLT 1 PSF 3 DRAWN BY: G.MCCUTCHEN DATE: 03–24–95 SIMILAR TO: 2813–403	THIRD ANGLE PROJECTION	TUBE BUSHING FOR .69 DIST TUBE	

QTY REQ'D EXT 06	EXT 05	EXT 04	EXT 03	EXT 02	EXT 01	EXT	ITEM	PART NAME	MATERIAL	DRAWING, PART OR MATERIAL NO
						00		ø 1.12 x .41 FC BRASS		

NOTE:
1. ALL CORNERS FREE OF BURRS

SPECIFICATIONS:
MATERIAL ~~UNS 36000 BRASS~~
Material: : C3604
Finish: PLAIN

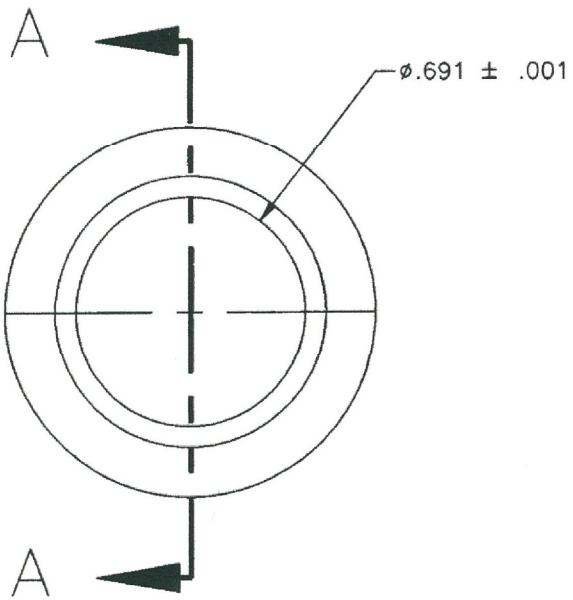

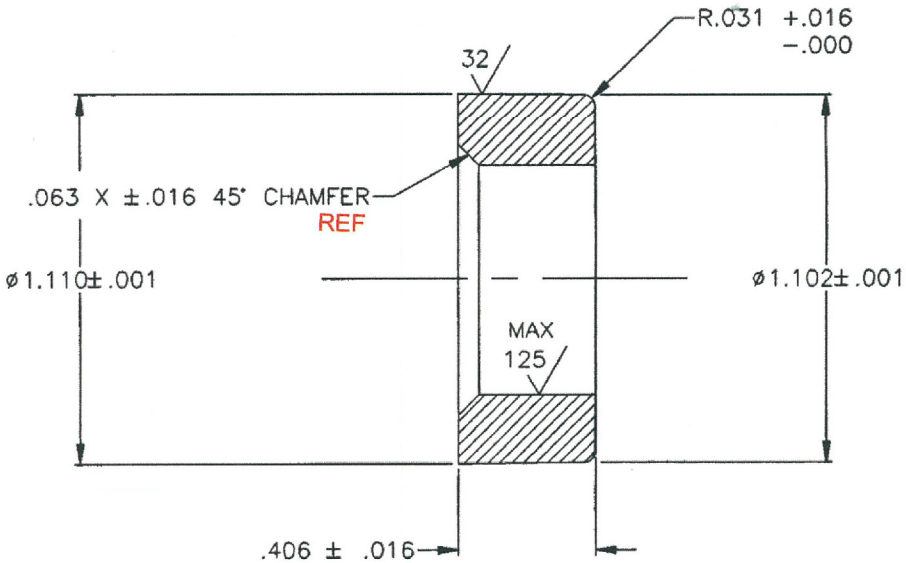

VIEW A–A